RoHS Compliant Pb

REV	ECN No.	DATE	REMARK
A	NEW	2018.06.13	NEW RELEASE
B	ECN2003008	2020.03.19	增加MYLAR规格
C	ECN2006015	2020.06.16	修改铁壳脚7.4正负0.1公差改为正负0.2
D	ECN2009002	2020.09.02	依客人要求增加卡勾尺寸
E	ECN2011002	2020.11.10	增加真空包装料号规格

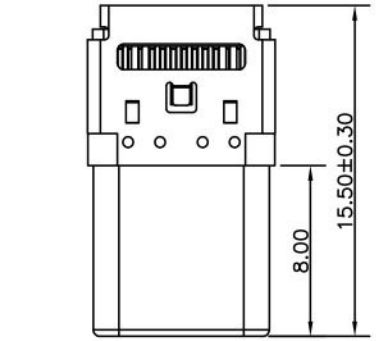

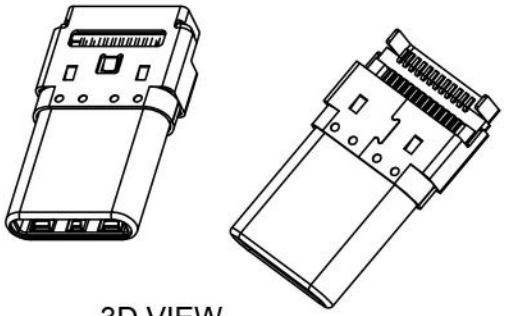

3D VIEW

NOTE:
1. Electrical Characteristics:
   Current Rating: 5A For Pin(A4,A9,B4,B9)
   1.25A For Others Pin
   Insulation Resistance: 100MΩ Min.
   Contact Resistance: 40 mΩ Max.
   Dielectric Withstanding Voltage:100V/AC 1Minute
2. Mechanical Characteristics:
   Insertion Force: 5~20N
   Extraction Force: Initial: 8~20N
   After durability: 6~20N
   Durability :10000 Cycles
3. Salt Spray :24H/48H
4. Operating Temperature: −30°C TO +85°C

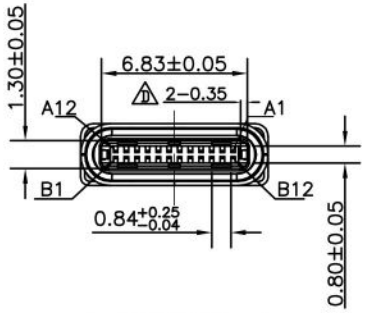

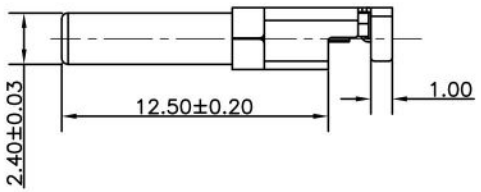

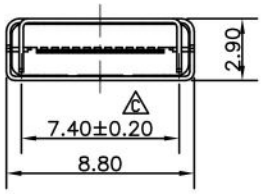

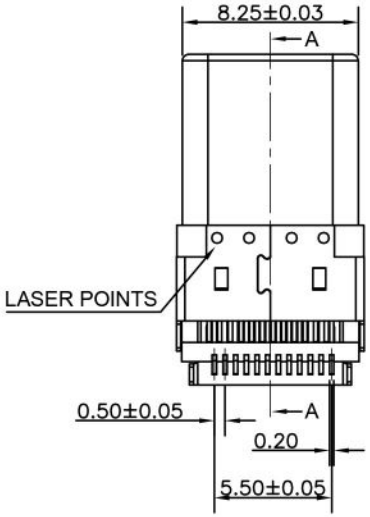

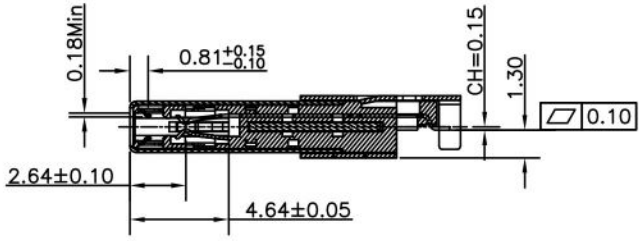

SECTION: A-A

ITEM	NAME	QTY.	MATERIAL	DESCRIPTION
6	Shield	1	Stainless Steel	Bright Nickel Plating
5	Housing	4	LCP	Color: Black
4	Latch	1	Stainless Steel	———
3	Contact	24	Copper Alloy	3u"gold plated on Contact area, Matte Tin plated on Soldertails, Nickel underplating over all
2	Emc Spring	2	Stainless Steel	———
1	Shell	1	Stainless Steel	Bright Nickel Plating

PART NO.:
SEE THE PART NUMBER CODE

QUALITY SYMBOL ▶ = 0 ≤ = 0

GENERAL TOLERANCES (UNLESS SPECIFIED)	
x.xxxx	± ---
x.xxx	± 0.10
x.xx	± 0.25
x.x	± 0.30
ANGULAR	± --°

深圳市威仕达电子有限公司
SHENZHEN VISTAR ELECTRONICS CO.,LTD

TITLE: U.S.B TYPE C PLUG SMT MIDDLE MOUNT RIGHT ANGLE L=15.5MM

DWG.NO.: USB-TC24-M04

SHEET NO.: 1 OF 1

DIMENSION STYLE: MM ONLY

DESIGN UNITS: METRIC

SCALE: 1:1

DRAWN BY	CARLOS	DATE 2020.11.10
CHECKED BY	JAY	DATE 2020.11.10
APPROVED BY	JACKY	DATE 2020.11.10

THIRD ANGLE PROJECTION

frame size: A4

RoHS Compliant Pb

REV	ECN No.	DATE	REMARK
A	NEW	2018.06.13	NEW RELEASE
B	ECN2003008	2020.03.19	增加MYLAR规格
C	ECN2006015	2020.06.16	修改铁壳脚7.4正负0.1公差改为正负0.2
D	ECN2009002	2020.09.02	依客人要求增加卡勾尺寸
E	ECN2011002	2020.11.10	增加真空包装料号规格

带塞子尺寸示意图

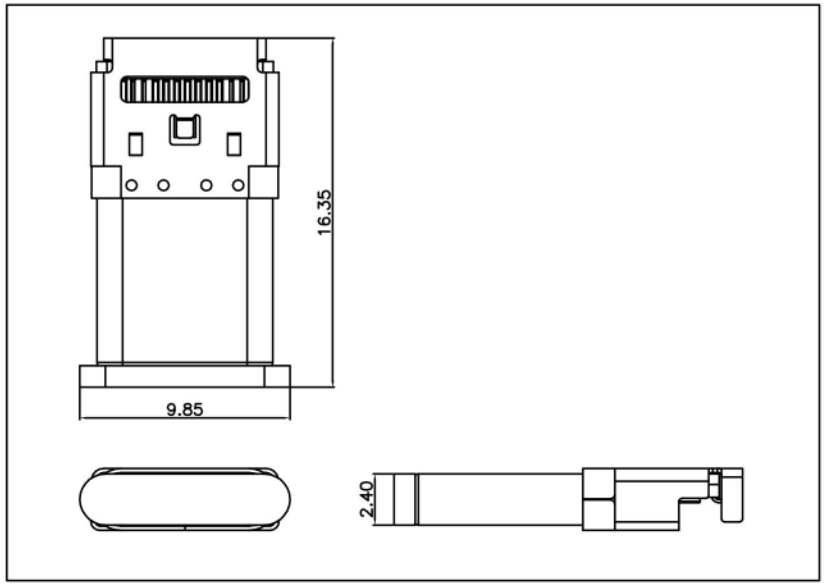

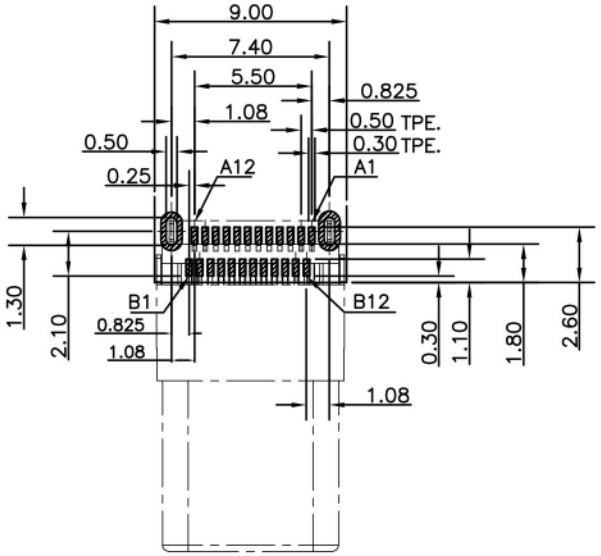

RECOMMENDED P.C.B. LAYOUT
T=0.80 OR 1.00mm

TOLERANCE UNSPECIFIED ±0.05mm

USB TYPE-C PIN ASSIGNMENTS

PIN NUMBER	SIGNAL NAME	PIN NUMBER	SIGNAL NAME
A1	GND	B12	GND
A2	SSTXp1	B11	SSRXp1
A3	SSTXn1	B10	SSRXn1
A4	VBUS	B9	VBUS
A5	CC1	B8	SBU2
A6	Dp1	B7	Dn2
A7	Dn1	B6	Dp2
A8	SBU1	B5	CC2
A9	VBUS	B4	VBUS
A10	SSRXn2	B3	SSTXn2
A11	SSRXp2	B2	SSTXp2
A12	GND	B1	GND

PART NO.:
SEE THE PART NUMBER CODE

QUALITY SYMBOL ▶ = 0 ≤ = 0

GENERAL TOLERANCES (UNLESS SPECIFIED)	
x.xxxx	± ---
x.xxx	± 0.10
x.xx	± 0.25
x.x	± 0.30
ANGULAR	± --°

深圳市威仕达电子有限公司
SHENZHEN VISTAR ELECTRONICS CO.,LTD

TITLE: U.S.B TYPE C PLUG SMT MIDDLE MOUNT RIGHT ANGLE L=15.5MM

DWG.NO.: USB-TC24-M04

SHEET NO.: 2 OF 2

DIMENSION STYLE: MM ONLY

DESIGN UNITS: METRIC

SCALE: 1:1

DRAWN BY	CARLOS	DATE 2020.11.10
CHECKED BY	JAY	DATE 2020.11.10
APPROVED BY	JACKY	DATE 2020.11.10

THIRD ANGLE PROJECTION

frame size: A4