REV	ECN No.	DATE	REMARK
A	NEW	2023.10.20	NEW RELEASE

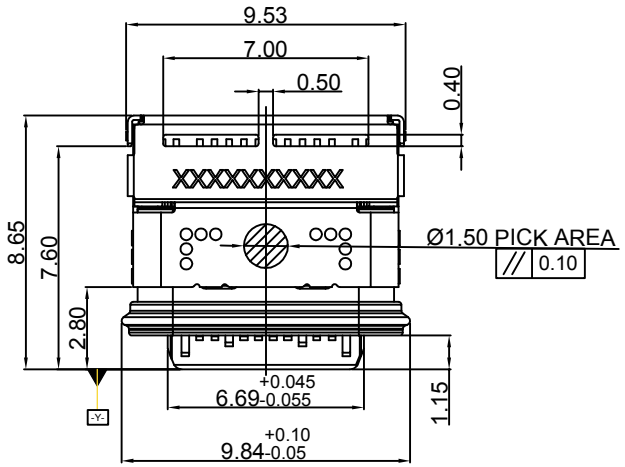

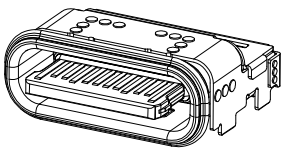

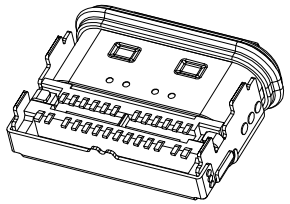

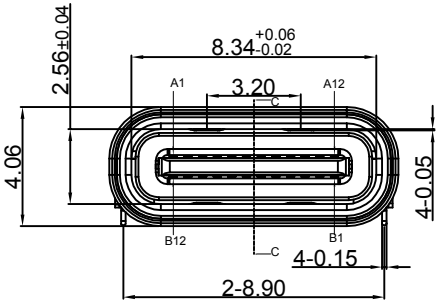

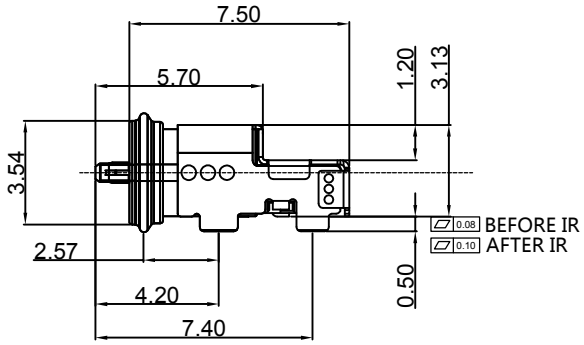

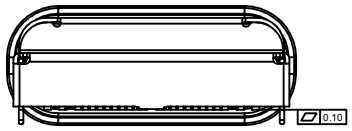

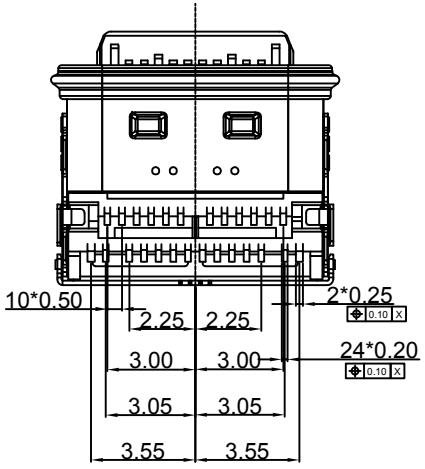

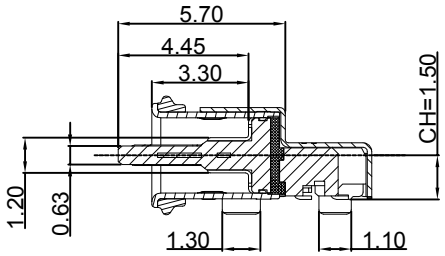

SECTION C-C (SCALE 1:1)

Table:

NO.	Description	QTY	Material	Remarks
7	LIM	1PCS	CHN-LIMS	BLACK
6	Outor Shell	1PCS	Stainless Steel SUS316	SOLDER NICKEL: NI PLATE
5	Main SHELL	1PCS	Stainless Steel SUS304	NI PLATED OR CLEANING
4	Small SHELL	1PCS	Stainless Steel SUS304	NI PLATED OR CLEANING
3	Contact	24PCS	Copper Alloy C7025	Au 3u" Plated On Vontact Area 3u" Plated On Solder Area; Nickel 50u"Min Under Plating Over All.
2	MID PLATE	1PCS	Stainless Steel SUS301	NI PLATED
1	Housing	1PCS	High Temperature Plastic PA9T	UL94V-0 Black

GENERAL TOLERANCES (UNLESS SPECIFIED)		DRAWN BY: HuangXiaoHao	Date: 2023.10.20	深圳市威仕达电子有限公司 Shenzhen Vistar Electronics Co.,Ltd.	
X.XXX	±0.10	CHECKED BY: liuzongliang	Date: 2023.10.20	TITLE: USB Type-C Female 24Pin 板上双贴 CH=1.5 IPX8	
X.XX	±0.25				
X.X	±0.30	APPROVED BY: Jacky	Date: 2023.10.20	PART NO. UCF24W0411	DWG NO. UCF24W0411
ANGULAR	±3°				
THIRD ANGLE PROJECTION		UNT mm	SCALE 1:1	DRAWING A4 / SHEET NO. 1 OF 3	REV. A

REV	ECN No.	DATE	REMARK
A	NEW	2023.10.20	NEW RELEASE

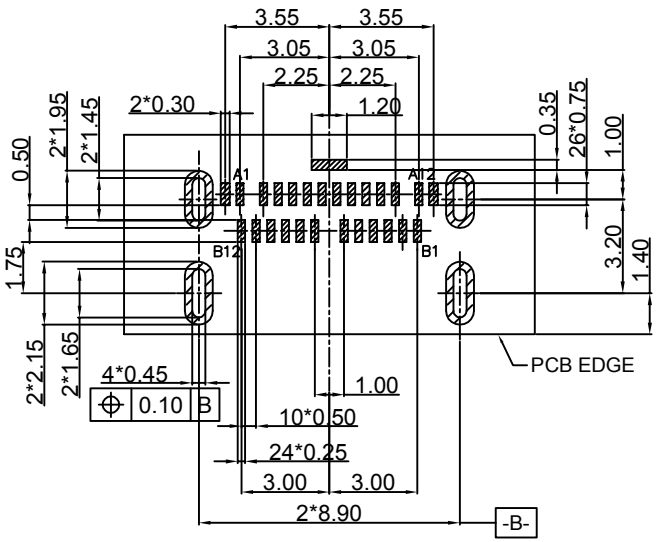

RECOMMENDED PCB LAYOUT
(Tolerance=±0.05)

Specifications:
1.Electrical Performance,
1-1. Current Rating:5 Amps. For Total VBUS/GND Pins;
0.5Amps For CC Pin,
0.25 Amps. For All Other Contact.
1-2. Voltage Rating:5 V DC/AC (Rms. Max)
1-3. Contact Resistance: 40mΩ Max Initial.
50mΩ Max After Test
1-4.Dielectric Withstanding Voltage: 100V AV
1-5.Insulation Resistance:100mΩ Min
2.Mechanical Performance,
2-1.Insertion Force: 5~20N.
2-2.Extraction Force: 8~20N.
2-3.Durability: 10000 Cycles.
3.Environmental Performance:
Operating Temperature: -25°C~+105°C.
4.IR Reflow:
The Peak Temperature On The Board Shall
Be Maintained For 10 Seconds At 260°C.
5.Salt Spray:48H

USB Type-C Pin Assignments

Pin Number	Signal Name	Pin Number	Signal Name
A1	GND	B12	GND
A2	SSTXp1	B11	SSRXp1
A3	SSTXn1	B10	SSRXn1
A4	VBUS	B9	VBUS
A5	CC1	B8	SBU2
A6	Dp1	B7	Dn2
A7	Dn1	B6	Dp2
A8	SBU1	B5	CC2
A9	VBUS	B4	VBUS
A10	SSRXn2	B3	SSTXn2
A11	SSRXp2	B2	SSTXp2
A12	GND	B1	GND

GENERAL TOLERANCES (UNLESS SPECIFIED)		DRAWN BY: HuangXiaoHao	Date: 2023.10.20	深圳市威仕达电子有限公司 Shenzhen Vistar Electronics Co.,Ltd.	
X.XXX	±0.10	CHECKED BY: liuzongliang	Date: 2023.10.20	TITLE: USB Type-C Female 24Pin 板上双贴 CH=1.5 IPX8	
X.XX	±0.25				
X.X	±0.30	APPROVED BY: Jacky	Date: 2023.10.20	PART NO. UCF24W0411	DWG NO. UCF24W0411
ANGULAR	±3°				
THIRD ANGLE PROJECTION		UNT mm	SCALE 1:1	DRAWING A4	SHEET NO. 2 OF 3 / REV. A

REV	ECN No.	DATE	REMARK
A	NEW	2023.10.20	NEW RELEASE

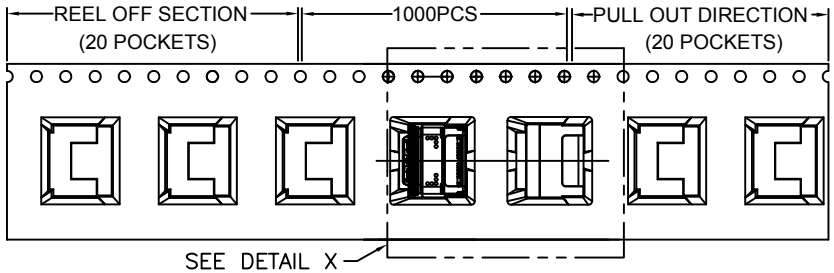

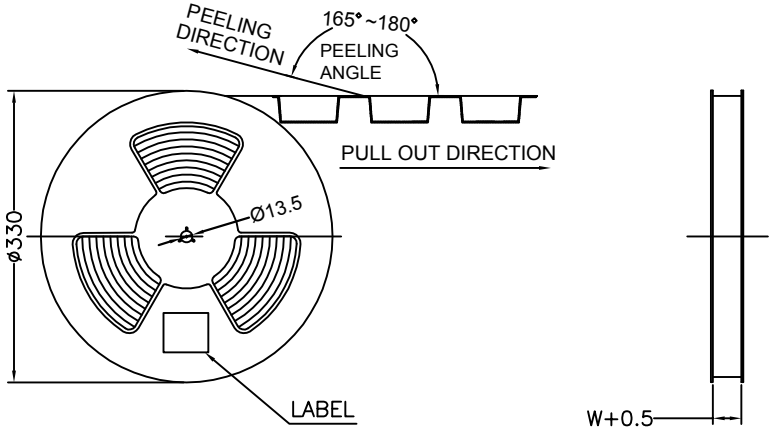

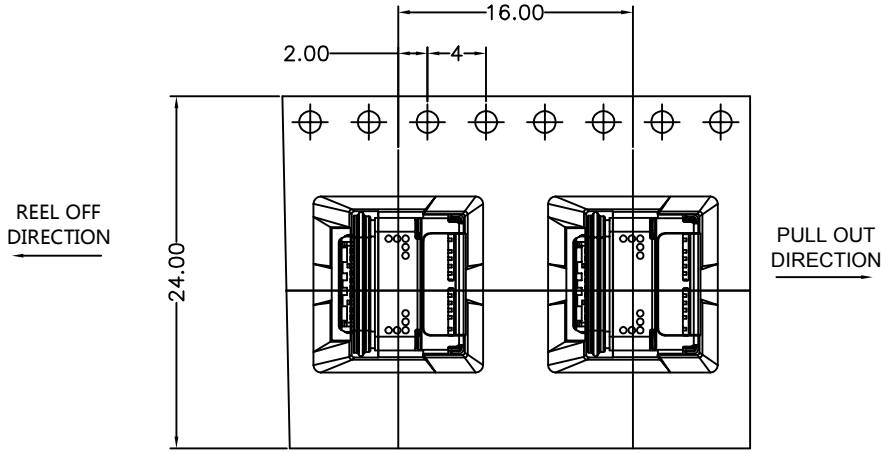

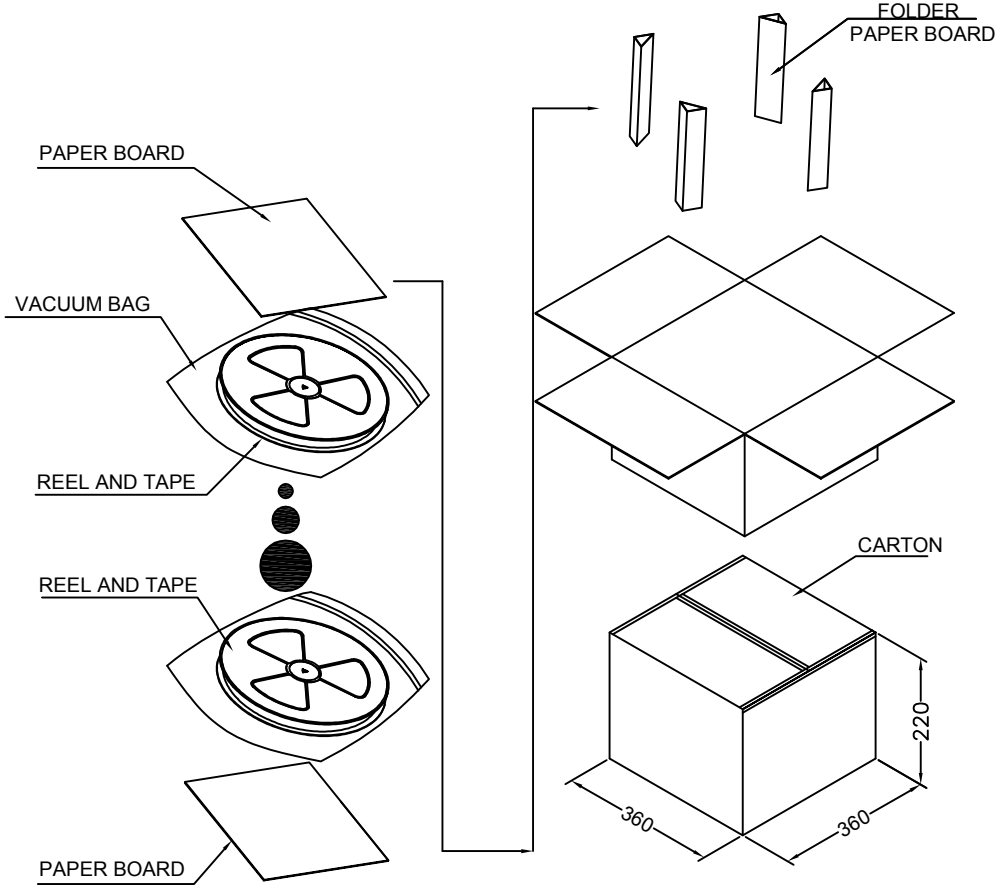

	REEL	CARTON
CONNECTOR (PCS)	1000	8000

GENERAL TOLERANCES (UNLESS SPECIFIED)		DRAWN BY: HuangXiaoHao	Date: 2023.10.20	深圳市威仕达电子有限公司 Shenzhen Vistar Electronics Co.,Ltd.	
X.XXX	±0.10	CHECKED BY: liuzongliang	Date: 2023.10.20	TITLE: USB Type-C Female 24Pin 板上双贴 CH=1.5 IPX8	
X.XX	±0.25				
X.X	±0.30	APPROVED BY: Jacky	Date: 2023.10.20	PART NO. UCF24W0411	DWG NO. UCF24W0411
ANGULAR	±3°				
THIRD ANGLE PROJECTION		UNT mm	SCALE 1:1	DRAWING A4	SHEET NO. 3 OF 3 / REV. A